ST407-RM CP2870 REV -

ALL INFORMATION CONTAINED IN THIS DOCUMENT SHOULD BE USED FOR REFERENCE PURPOSES ONLY & ARE SUBJECT TO CHANGE WITHOUT PRIOR NOTIFICATION. ALSO, THIS DOCUMENT IS CONSIDERED PROPRIETARY & THE SOLE PROPERTY OF CRYOMECH, INC. & SHOULD NOT BE REPRODUCED IN ANY MANNER WITHOUT PRIOR WRITTEN APPROVAL.

CP2870 COMPRESSOR PACKAGE
(WATED COOLED)

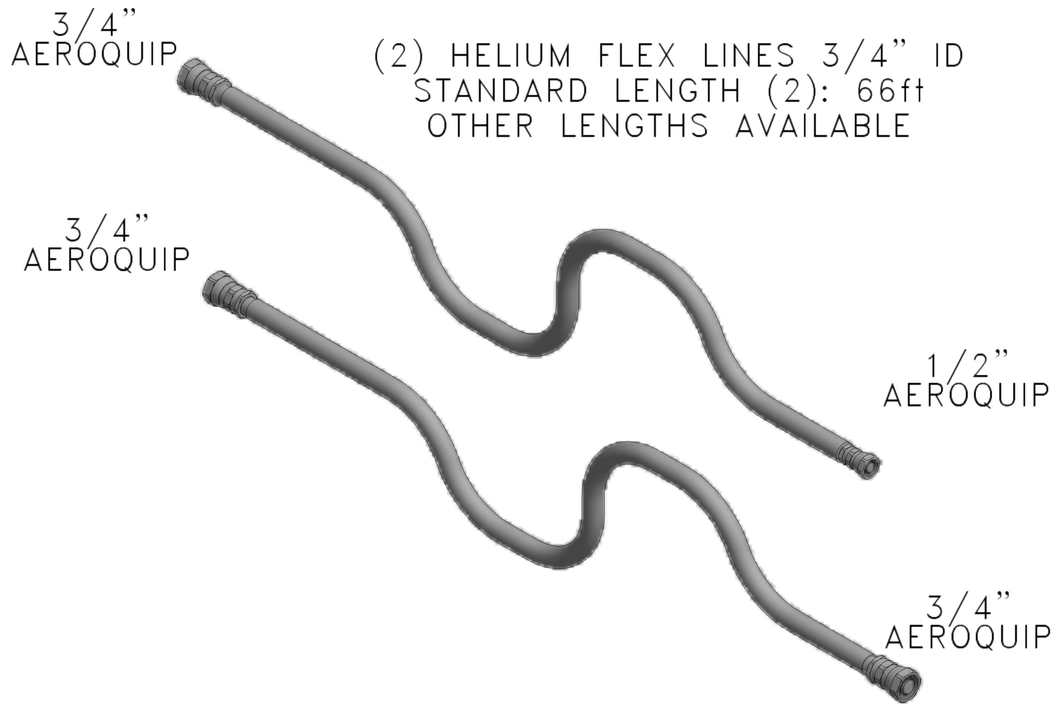

(2) HELIUM FLEX LINES 3/4" ID
STANDARD LENGTH (2): 66ft
OTHER LENGTHS AVAILABLE

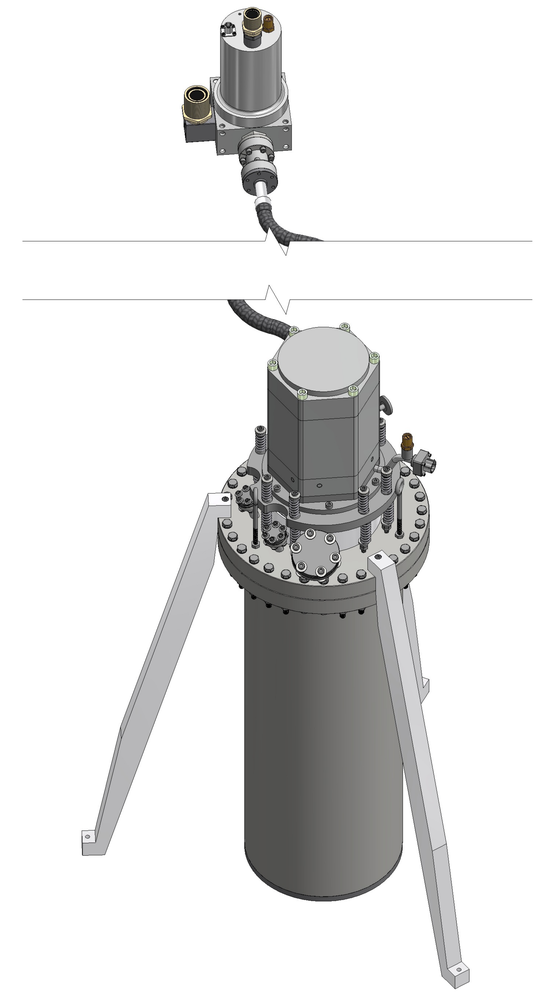

ST407-RM CRYOSTAT

MANUAL

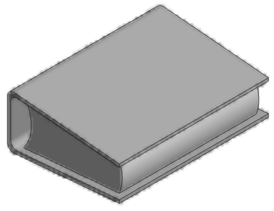

TOOL KIT

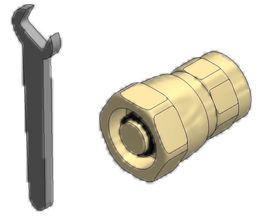

TEMPERATURE CONTROLLER

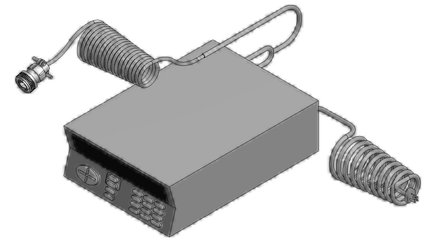

ECN	ZONE	REV	DESCRIPTION	DATE
	–	–	INITIAL RELEASE	26SEP13

THIRD ANGLE PROJECTION

CRYOMECH, INC
113 FALSO DRIVE SYRACUSE, N.Y. 13211
Tel: (315)455-2555 Fax:(315)455-2544

ALL DIMENSIONS ARE IN INCHES
TOLERANCES: FRACTIONS ±1/32 DECIMALS XXX=±.005 XX=±.01 X=±.1
ANGLES ±.5° ALLOVER FINISH 25 Ra
CONCENTRICITY .005 TOTAL INDICATOR RUN OUT
PERPENDICULAR ±.002 (UNLESS OTHERWISE SPECIFIED)

NAME: ST407-RM CP2870 SYSTEM DRAWING
DWG #: ST407-RM CP2870 SHT 1 OF 1
MATERIAL: AS STATED
DWN BY: AMF DATE: 26SEP13 SCALE: TO FIT DWG SIZE: A
1ST CHK: DATE: 2ND CHK: DATE:
CUST: BTA: