CH60403 | REV A

ALL INFORMATION CONTAINED IN THIS DOCUMENT SHOULD BE USED FOR REFERENCE PURPOSES ONLY & ARE SUBJECT TO CHANGE WITHOUT PRIOR NOTIFICATION. ALSO, THIS DOCUMENT IS CONSIDERED PROPRIETARY & THE SOLE PROPERTY OF CRYOMECH, INC. & SHOULD NOT BE REPRODUCED IN ANY MANNER WITHOUT PRIOR WRITTEN APPROVAL.

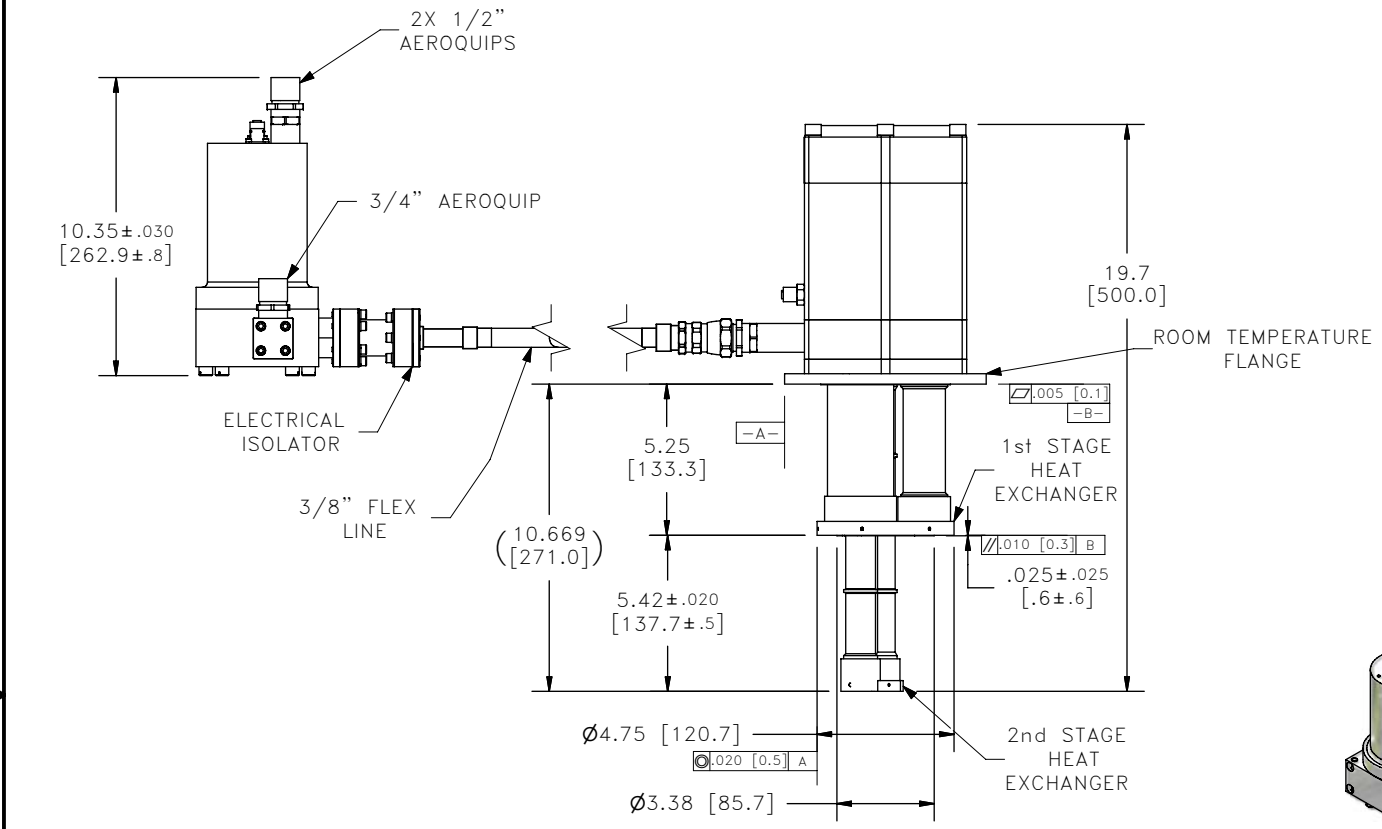

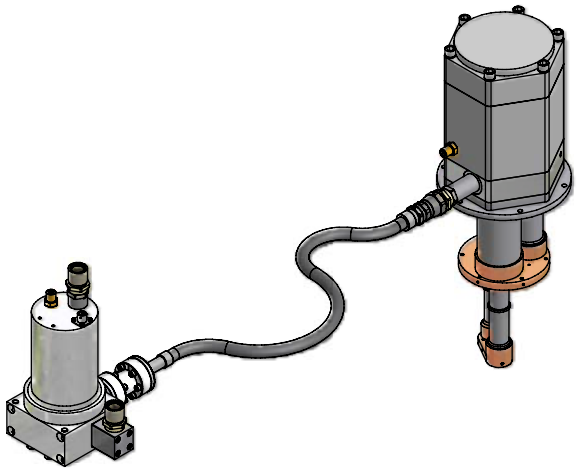

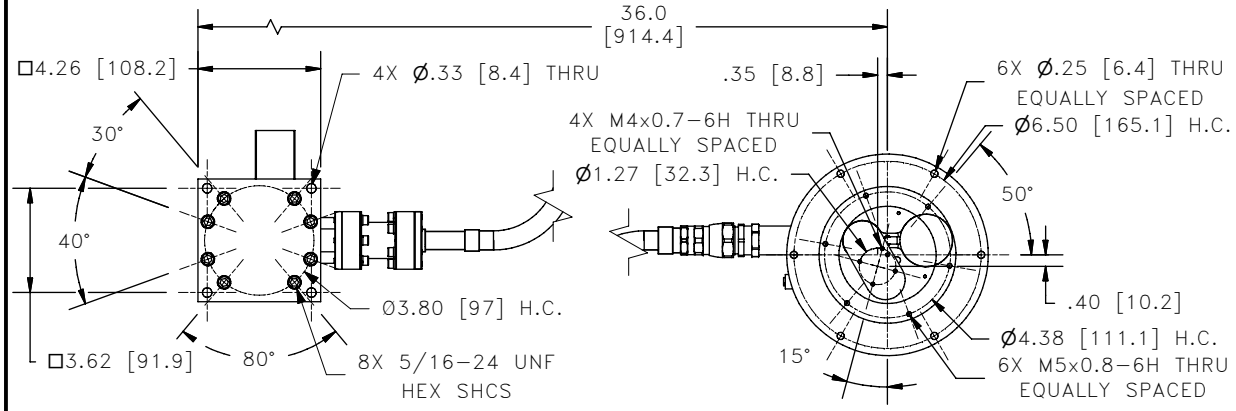

SPECIAL NOTE: COLDHEAD MUST BE OPERATED COLD END DOWN

THIRD ANGLE PROJECTION

CRYOMECH, INC
113 FALSO DRIVE SYRACUSE, N.Y. 13211
Tel: (315)455–2555 Fax:(315)455–2544

ALL DIMENSIONS ARE IN INCHES
TOLERANCES: FRACTIONS ±1/32 DECIMALS XXX=±.005 XX =±.01
ANGLES ±.5° ALLOVER FINISH 25 Ra
CONCENTRICITY .005 TOTAL INDICATOR RUN OUT
PERPENDICULAR ±.002 (UNLESS OTHERWISE SPECIFIED)

NAME: PT403-RM COLDHEAD OUTLINE			
DWG #: CH60403	SHT 1 OF 1		
MATERIAL: 103-29			
DWN BY: BMR DATE: 01JUN06	SCALE: .150	DWG SIZE: A	
1ST CHK: BZ DATE: 06JUN06	2ND CHK: JC	DATE: 06JUN06	
CUST:	BTA: BTA-CH40403		

ECN	ZONE	REV	DESCRIPTION	DATE
1669	–	A	ADDED DIMS. TO R.M.	12SEP08
4	–	–	INITIAL RELEASE	06JUN06